L 1530mm x W 860mm x H 500mm

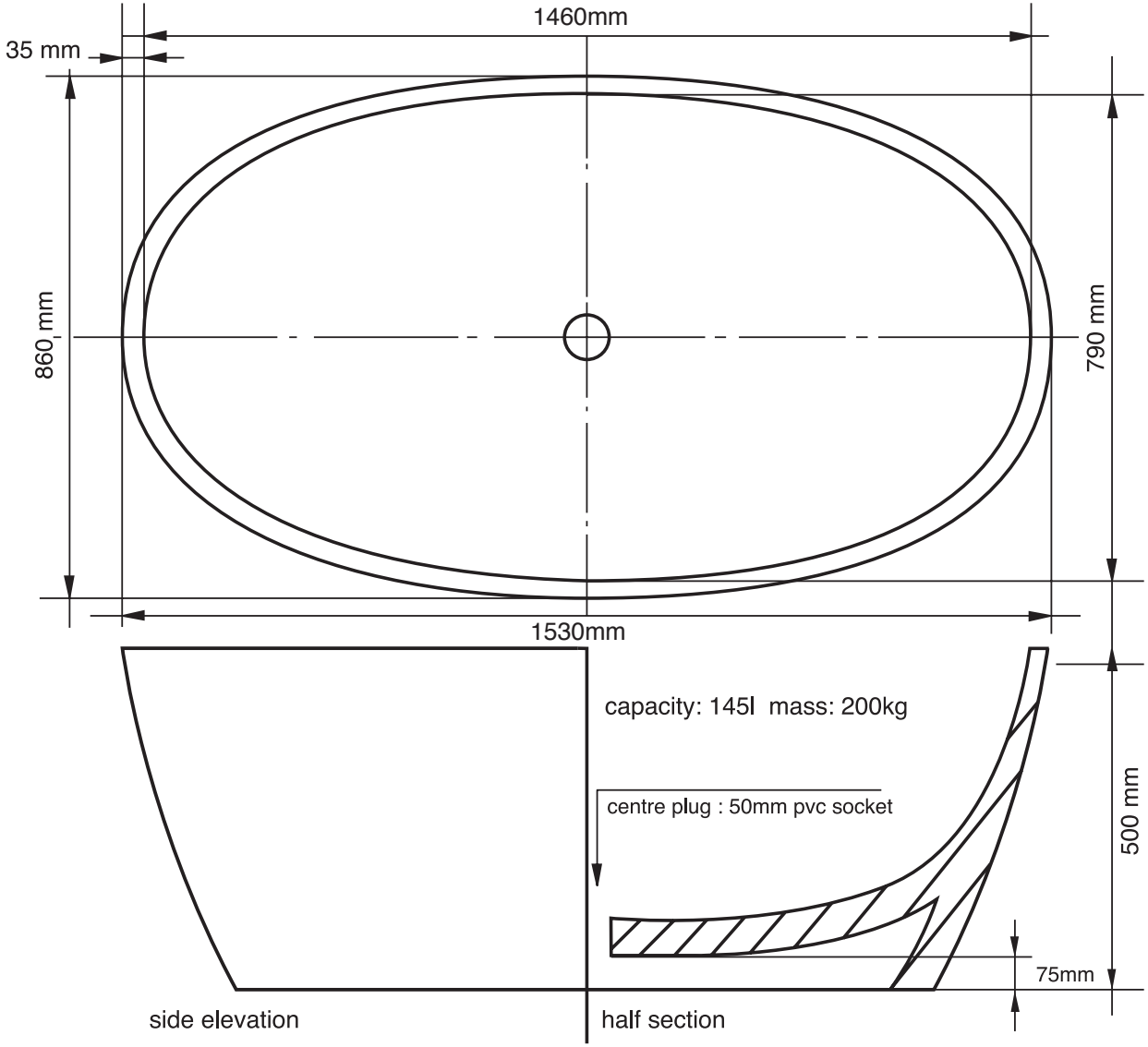

Base Dimensions 1200 mm x 600 mm

2016 © www.livingstonebaths.com