L 1725mm x W 765mm x H 520mm

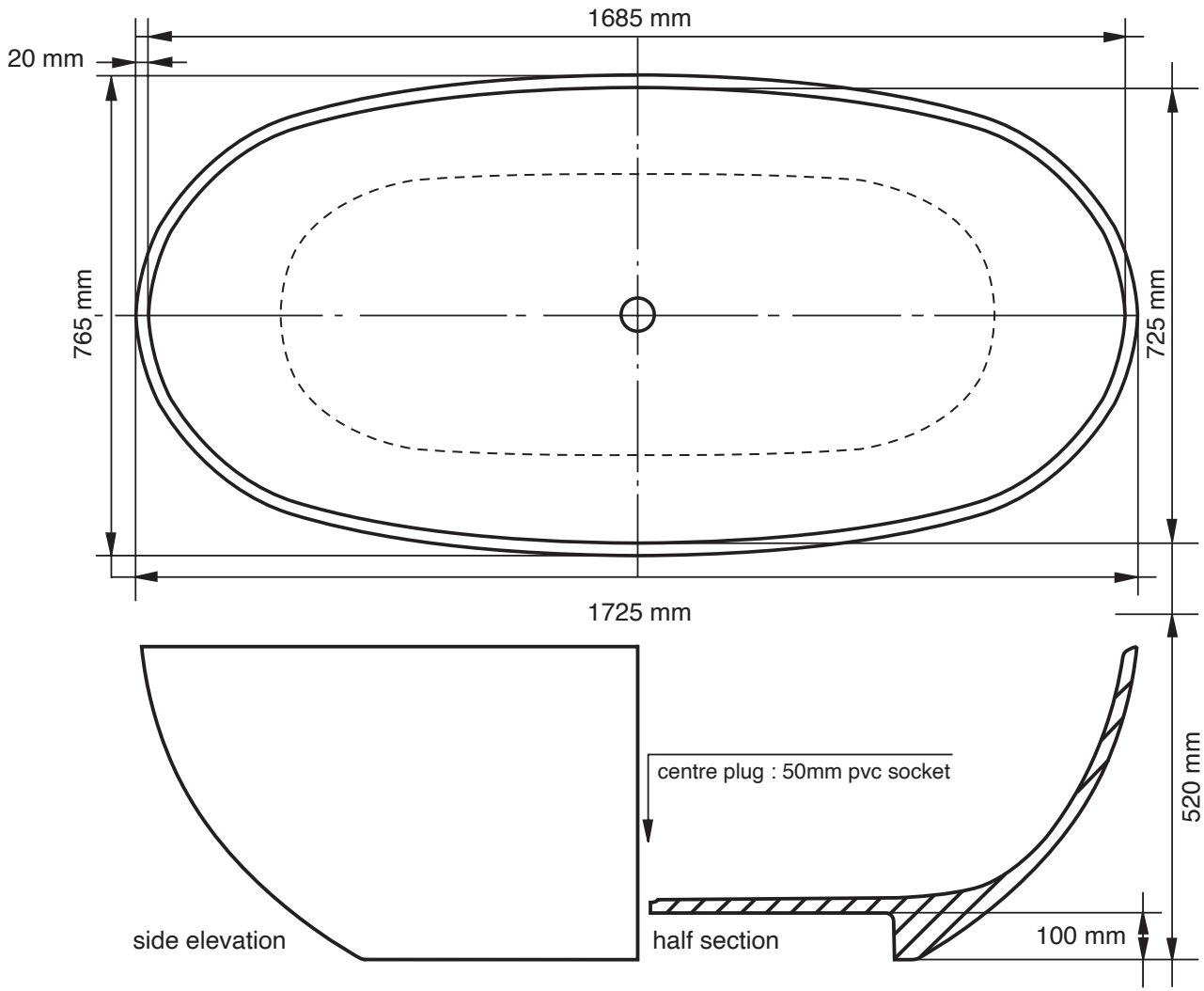

Base Dimensions 1190 mm x 530 mm

2024 © www.livingstonebaths.com