A-A (1:20)

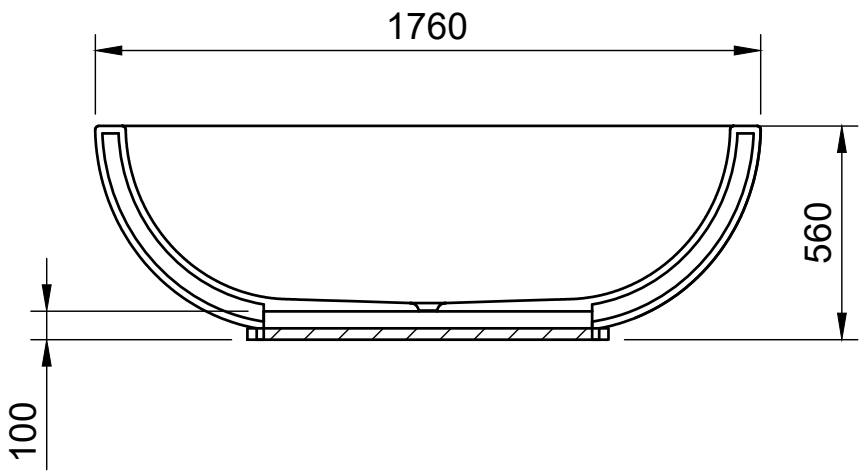



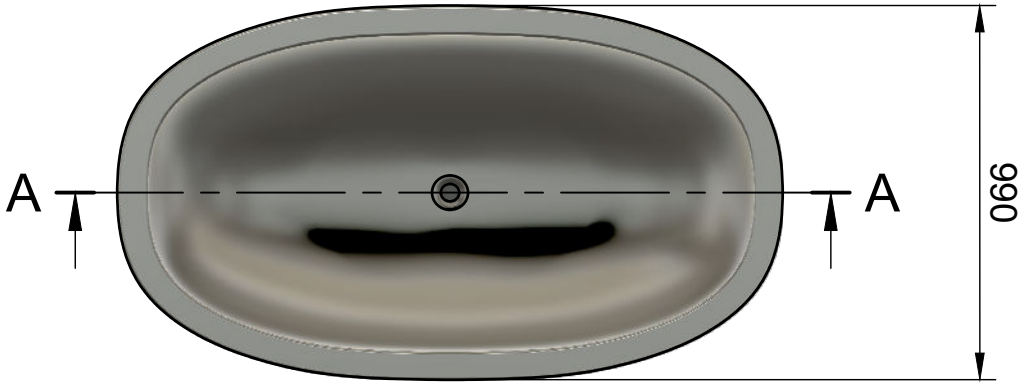

livingstone baths

ISOLA BATH

DIMENTIONS:
1760 X 990 X 560