
livingstone
baths
COLLECTION

Certificate of Registration

Livingstone Baths (Pty) Ltd
10-14 Evans Avenue, Epping, Cape Town, South Africa

have been assessed and approved to:

ISO 9001:2015

Quality Management System

The approved management system applies to the following scope:

Livingstone Baths (Pty) Ltd produce luxury baths and basins of excellent quality; we provide dedicated research and development on conceptual design.

Original Approval:	11th March 2026
Current Certificate:	11th March 2026
Certificate Expiry:	11th March 2027
Certificate Number:	SA2218

Signed: Certification Officer

This certificate remains valid while the holder maintains their administration systems in accordance with the standards and guidelines stated above, which will be audited annually by QAS International. The holder is entitled to display the above registration mark for the duration of this certificate, which should be returned to QAS International upon reasonable request

Tel: 020 31989788 - info@qas-international.com - https://www.qas-international.com
Issuing Office: QAS International, 20 Grosvenor Place, London, England, SW1X 7HN



Welcome to Livingstone Baths, a proudly family-owned business with a story rooted in passion, craftsmanship, and growth. What began in a humble garage has evolved into a thriving operation based in Epping Industria, Cape Town.

At Livingstone Baths, we specialise in creating beautifully designed baths and basins, offering a wide range of shapes to complement any space or style. Each piece is thoughtfully crafted to bring both elegance and functionality into your home.

We also offer fully bespoke solutions, with the ability to manufacture products in any shade from the RAL colour chart, giving you the freedom to personalise your space exactly as you envision it.

Our commitment to quality, flexibility, and timeless design ensures that every product we create is made to last and made to be loved.

KEY
BENEFITS:

Our products have been individually crafted and hand finished.



DURABLE



SCRATCH RESISTANT



UV STABLE



NON POROUS



EASY TO CLEAN



STAIN RESISTANT



REPAIRABLE



MOULD RESISTANT



EACH PRODUCT IS BACKED BY A
25 YEAR MANUFACTURERS WARRANTY.

SILVER BATH RANGE:

THE ALEXA



A-A (1:20)

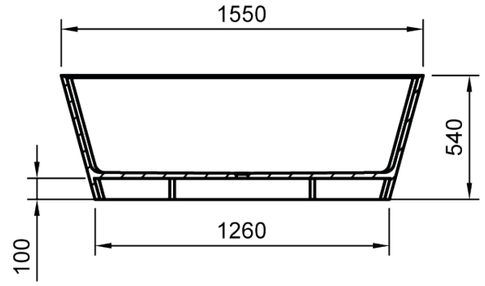

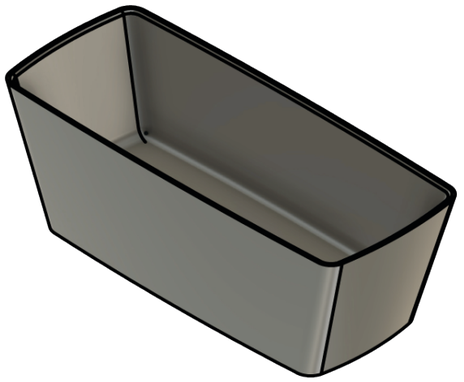

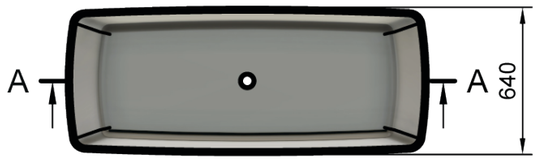

Dimensions:
1550 X 640 X 540



Standard colours, as well as any shade from the RAL colour chart. Metallic finishes available.

Colour Options:
White or Colour – Two-tone (White inside, standard colour outside.)
Colour – Standard colour inside and outside.

Finishes:
Available in Polished or Matt finish.

Custom Finishes:
Includes any custom colours outside standard options and all metallics.
Please contact us for a quotation on all custom finishes.

Nicci Spout Conversion Options Available.



THE AMELIA



A-A (1:20)

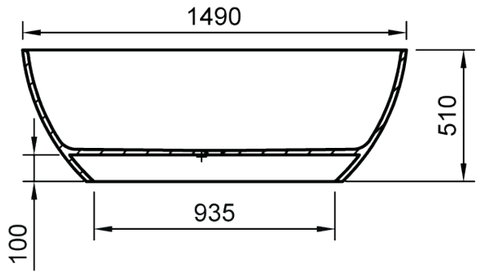

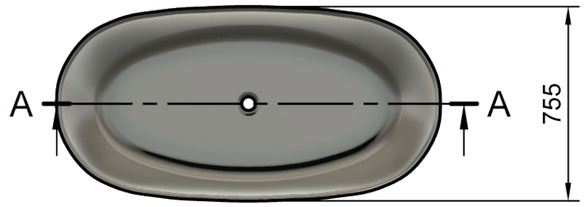



Dimensions:
1490 X 755 X 510



Standard colours, as well as any shade from the RAL colour chart. Metallic finishes available.

Colour Options:
White or Colour – Two-tone (White inside, standard colour outside.)
Colour – Standard colour inside and outside.

Finishes:
Available in Polished or Matt finish.

Custom Finishes:
Includes any custom colours outside standard options and all metallics.
Please contact us for a quotation on all custom finishes.

Nicci Spout Conversion & Integrated Overflow Options Avaliable.



THE CHLOE



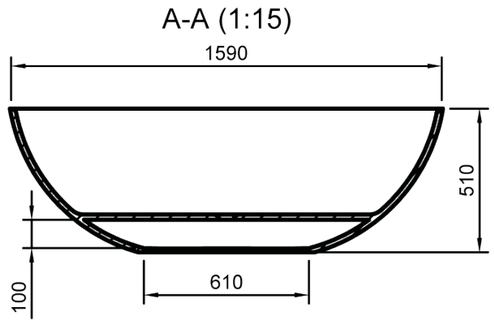

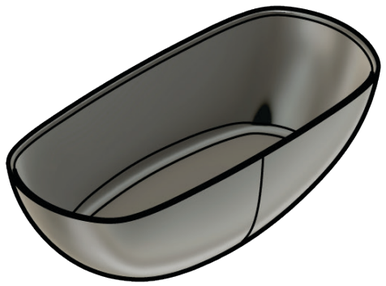

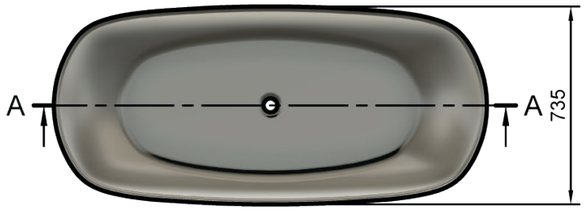

Dimensions:
1590 X 735 X 510



Standard colours, as well as any shade from the RAL colour chart. Metallic finishes available.

Colour Options:
White or Colour – Two-tone (White inside, standard colour outside.)
Colour – Standard colour inside and outside.

Finishes:
Available in Polished or Matt finish.

Custom Finishes:
Includes any custom colours outside standard options and all metallics.
Please contact us for a quotation on all custom finishes.

Nicci Spout Conversion Options Available.



THE FRANCES



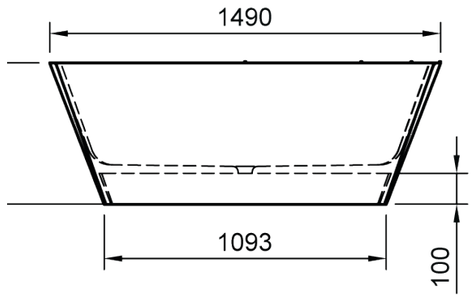

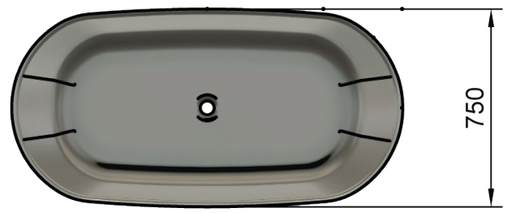

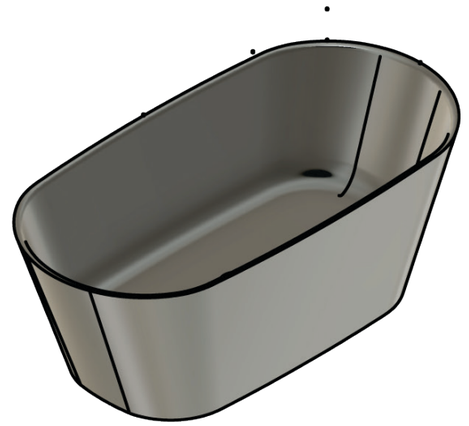

Dimensions:
1490 X 520 X 750



Standard colours, as well as any shade from the RAL colour chart. Metallic finishes available.

Colour Options:
White or Colour – Two-tone (White inside, standard colour outside.)
Colour – Standard colour inside and outside.

Finishes:
Available in Polished or Matt finish.

Custom Finishes:
Includes any custom colours outside standard options and all metallics.
Please contact us for a quotation on all custom finishes.

Nicci Spout Conversion Options Available.



THE MONICA



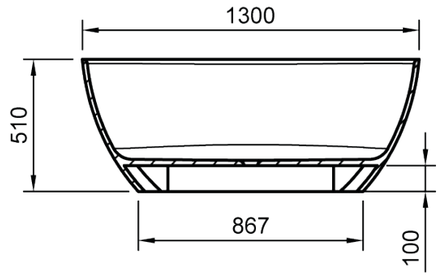

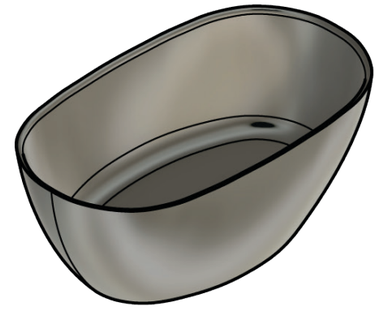

A - A

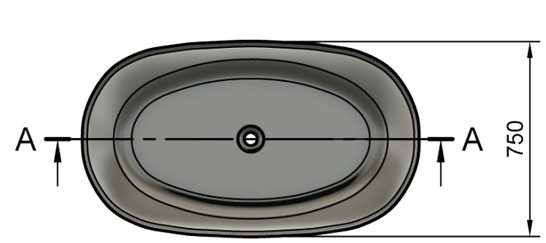

Dimensions:
1300 X 750 X 510



Standard colours, as well as any shade from the RAL colour chart. Metallic finishes available.

Colour Options:
White or Colour – Two-tone (White inside, standard colour outside.)
Colour – Standard colour inside and outside.

Finishes:
Available in Polished or Matt finish.

Custom Finishes:
Includes any custom colours outside standard options and all metallics.
Please contact us for a quotation on all custom finishes.

Nicci Spout Conversion Options Available.



THE MONROE



A-A (1:18)

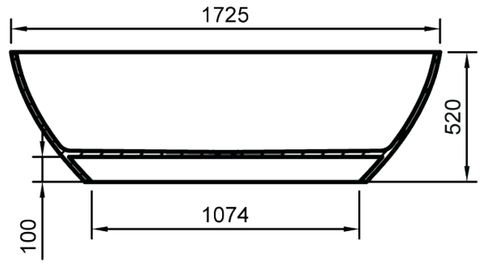

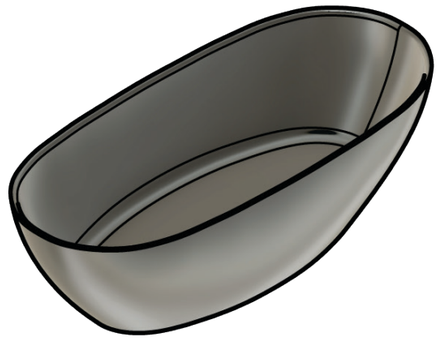

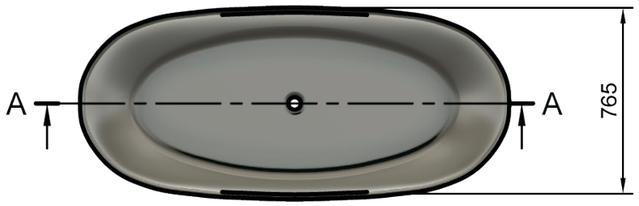

Dimensions:
1725 X 765 X 520



Standard colours, as well as any shade from the RAL colour chart. Metallic finishes available.

Colour Options:
White or Colour – Two-tone (White inside, standard colour outside.)
Colour – Standard colour inside and outside.

Finishes:
Available in Polished or Matt finish.

Custom Finishes:
Includes any custom colours outside standard options and all metallics.
Please contact us for a quotation on all custom finishes.

Nicci Spout Conversion Options Available.



THE SIENNA



A-A (1:20)

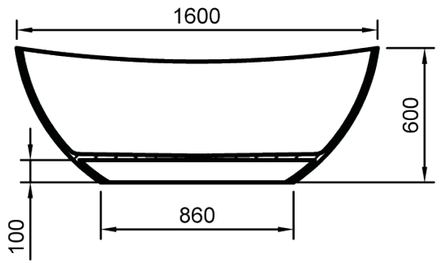

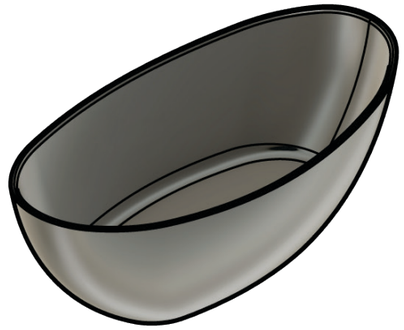

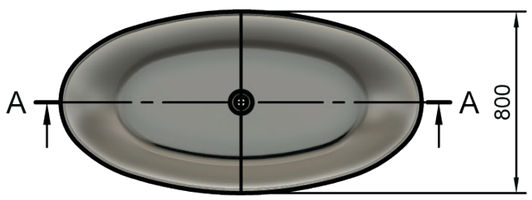

Dimensions:
1600 X 800 X 600



Standard colours, as well as any shade from the RAL colour chart. Metallic finishes available.

Colour Options:
White or Colour – Two-tone (White inside, standard colour outside.)
Colour – Standard colour inside and outside.

Finishes:
Available in Polished or Matt finish.

Custom Finishes:
Includes any custom colours outside standard options and all metallics.
Please contact us for a quotation on all custom finishes.

Nicci Spout Conversion & Integrated Overflow Options Avaliable.



THE TAYLOR



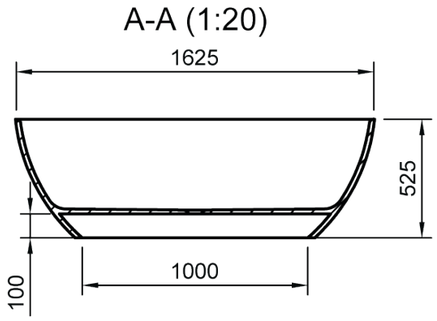



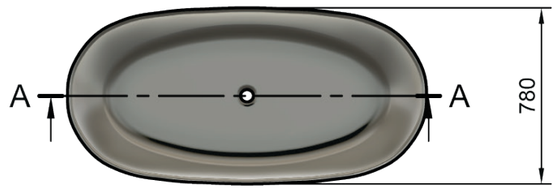

Dimensions:
1625 X 780 X 525



Standard colours, as well as any shade from the RAL colour chart. Metallic finishes available.

Colour Options:
White or Colour – Two-tone (White inside, standard colour outside.)
Colour – Standard colour inside and outside.

Finishes:
Available in Polished or Matt finish.

Custom Finishes:
Includes any custom colours outside standard options and all metallics.
Please contact us for a quotation on all custom finishes.

Nicci Spout Conversion & Integrated Overflow Options Avaliable.

THE ZARA



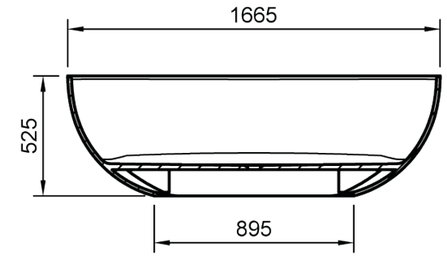

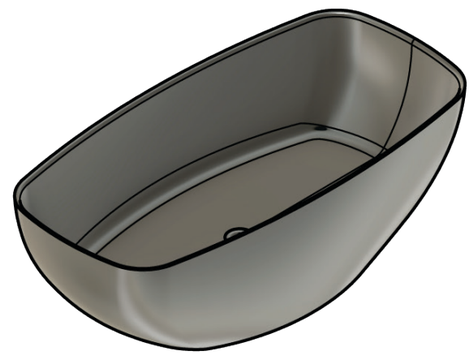



Dimensions:
1665 X 840 X 525



Standard colours, as well as any shade from the RAL colour chart. Metallic finishes available.

Colour Options:
White or Colour – Two-tone (White inside, standard colour outside.)
Colour – Standard colour inside and outside.

Finishes:
Available in Polished or Matt finish.

Custom Finishes:
Includes any custom colours outside standard options and all metallics.
Please contact us for a quotation on all custom finishes.

Integrated Overflow Options Available.



THE DAKOTA



A-A (1:20)

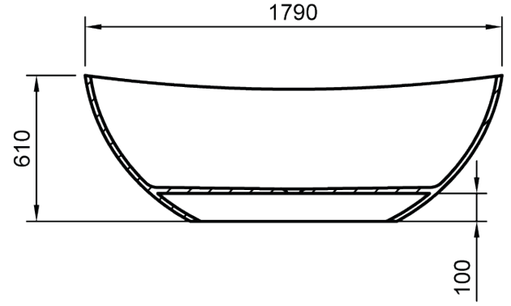



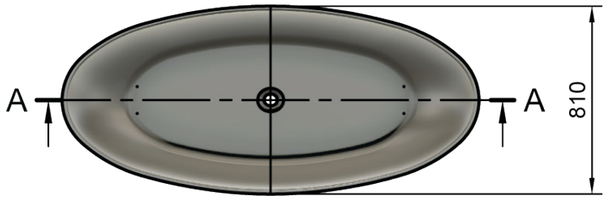

Dimensions:
1790 X 810 X 610



Standard colours, as well as any shade from the RAL colour chart. Metallic finishes available.

Colour Options:
White or Colour – Two-tone (White inside, standard colour outside.)
Colour – Standard colour inside and outside.

Finishes:
Available in Polished or Matt finish.

Custom Finishes:
Includes any custom colours outside standard options and all metallics.
Please contact us for a quotation on all custom finishes.

Nicci Spout Conversion Options Available.

THE ADELE



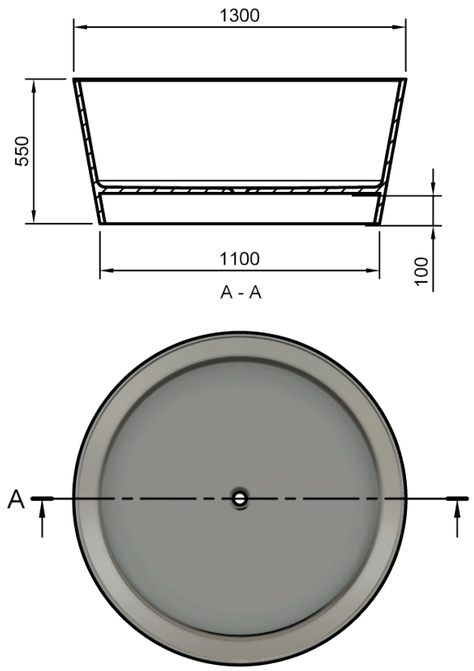

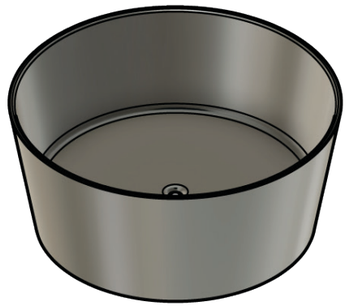

Dimensions:
1300D X 550H



Standard colours, as well as any shade from the RAL colour chart. Metallic finishes available.

Colour Options:
White or Colour – Two-tone (White inside, standard colour outside.)
Colour – Standard colour inside and outside.

Finishes:
Available in Polished or Matt finish.

Custom Finishes:
Includes any custom colours outside standard options and all metallics.
Please contact us for a quotation on all custom finishes.

Nicci Spout Conversion Options Available.

GOLD BATH RANGE:



THE ISOLA



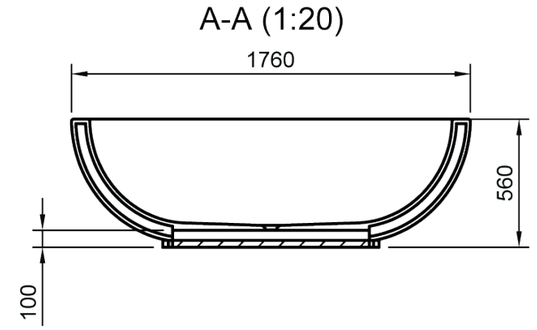





Dimensions:
1760 X 990 X 560



Standard colours, as well as any shade from the RAL colour chart. Metallic finishes available.

Colour Options:
White or Colour – Two-tone (White inside, standard colour outside.)
Colour – Standard colour inside and outside.

Finishes:
Available in Polished or Matt finish.

Custom Finishes:
Includes any custom colours outside standard options and all metallics.
Please contact us for a quotation on all custom finishes.

Nicci Spout Conversion Options Available.

THE LUSSO



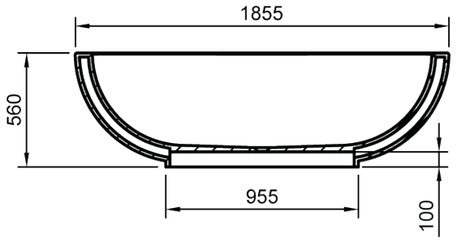



A - A



Dimensions:
1855 X 1080 X 560



Standard colours, as well as any shade from the RAL colour chart. Metallic finishes available.

Colour Options:
White or Colour – Two-tone (White inside, standard colour outside.)
Colour – Standard colour inside and outside.

Finishes:
Available in Polished or Matt finish.

Custom Finishes:
Includes any custom colours outside standard options and all metallics.
Please contact us for a quotation on all custom finishes.

Nicci Spout Conversion Options Available.

THE ARYNA



A-A (1:25)

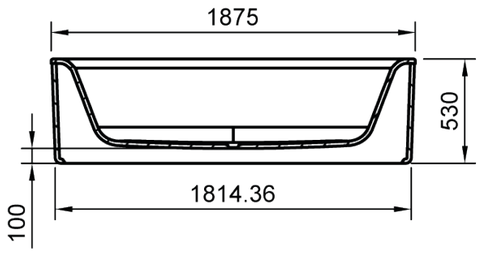



Dimensions:
1875 x 910 x 530



Standard colours, as well as any shade from the RAL colour chart. Metallic finishes available.

Colour Options:
White or Colour – Two-tone (White inside, standard colour outside.)
Colour – Standard colour inside and outside.

Finishes:
Available in Polished or Matt finish.

Custom Finishes:
Includes any custom colours outside standard options and all metallics.
Please contact us for a quotation on all custom finishes.

Nicci Spout Conversion Options Available.

THE FLUTED ARYNA



A-A (1:20)

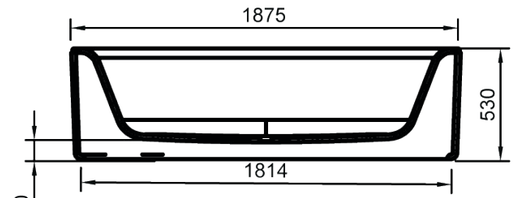



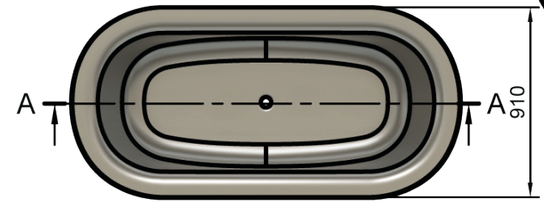

Dimensions:
1875 X 910 X 530



Standard colours, as well as any shade from the RAL colour chart. Metallic finishes available.

Colour Options:
White or Colour – Two-tone (White inside, standard colour outside.)
Colour – Standard colour inside and outside.

Finishes:
Available in Polished or Matt finish.

Custom Finishes:
Includes any custom colours outside standard options and all metallics.
Please contact us for a quotation on all custom finishes.

Nicci Spout Conversion Options Available.

THE LILY



A-A (1:20)

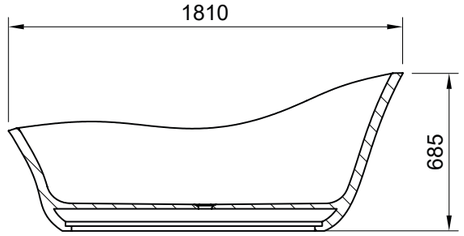



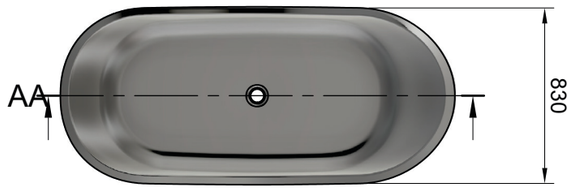

Dimensions:
1810 X 830 X 685



Standard colours, as well as any shade from the RAL colour chart. Metallic finishes available.

Colour Options:
White or Colour – Two-tone (White inside, standard colour outside.)
Colour – Standard colour inside and outside.

Finishes:
Available in Polished or Matt finish.

Custom Finishes:
Includes any custom colours outside standard options and all metallics.
Please contact us for a quotation on all custom finishes.

Nicci Spout Conversion Options Available.



SILVER
BASIN RANGE:



A-A (1:8)

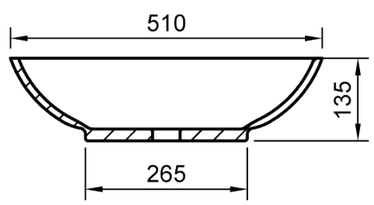



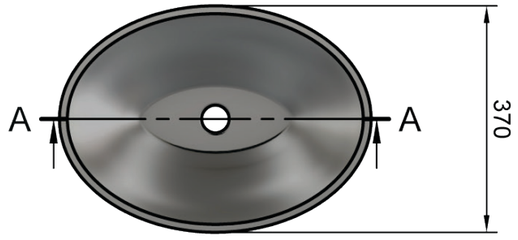

Dimensions:
510 X 370 X 135



Standard colours, as well as any shade from the RAL colour chart. Metallic finishes available.

Colour Options:
White or Colour – Two-tone (White inside, standard colour outside.)
Colour – Standard colour inside and outside.

Finishes:
Available in Polished or Matt finish.

Custom Finishes:
Includes any custom colours outside standard options and all metallics.
Please contact us for a quotation on all custom finishes.

THE AMBER



A-A (1:8)

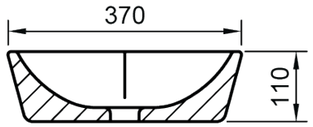



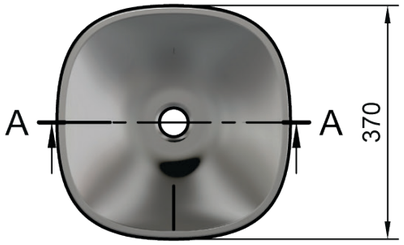

Dimensions:
370 X 370 X 110



Standard colours, as well as any shade from the RAL colour chart. Metallic finishes available.

Colour Options:
White or Colour – Two-tone (White inside, standard colour outside.)
Colour – Standard colour inside and outside.

Finishes:
Available in Polished or Matt finish.

Custom Finishes:
Includes any custom colours outside standard options and all metallics.
Please contact us for a quotation on all custom finishes.

THE BUTLER



A-A (1:10)

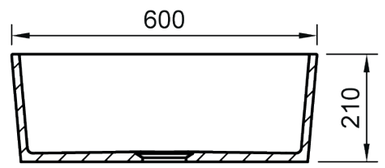

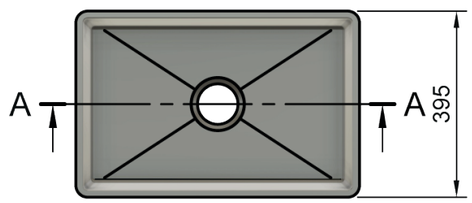

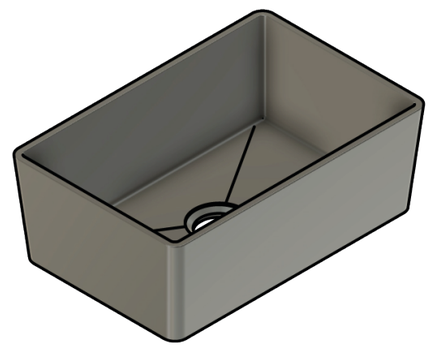

Dimensions:
600 X 395 X 210



Standard colours, as well as any shade from the RAL colour chart. Metallic finishes available.

Colour Options:
White or Colour – Two-tone (White inside, standard colour outside.)
Colour – Standard colour inside and outside.

Finishes:
Available in Polished or Matt finish.

Custom Finishes:
Includes any custom colours outside standard options and all metallics.
Please contact us for a quotation on all custom finishes.

THE GEMELLI



A-A (1:8)

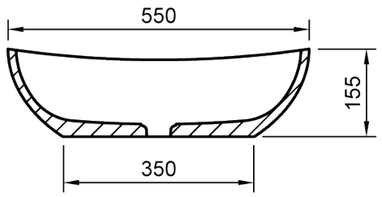



Dimensions:
550 X 335 X 155



Standard colours, as well as any shade from the RAL colour chart. Metallic finishes available.

Colour Options:
White or Colour – Two-tone (White inside, standard colour outside.)
Colour – Standard colour inside and outside.

Finishes:
Available in Polished or Matt finish.

Custom Finishes:
Includes any custom colours outside standard options and all metallics.
Please contact us for a quotation on all custom finishes.

THE HAILEY UNDERSLUNG



A-A (1:8)

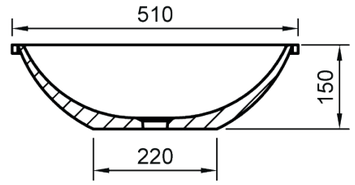

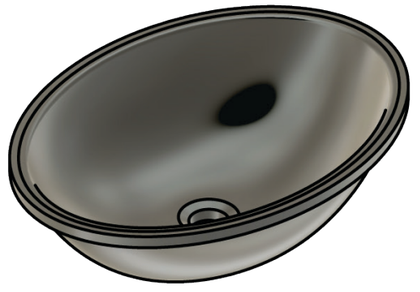

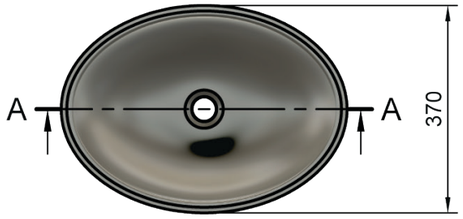

Dimensions:
510 X 370 X 150



Standard colours, as well as any shade from the RAL colour chart. Metallic finishes available.

Colour Options:
White or Colour – Two-tone (White inside, standard colour outside.)
Colour – Standard colour inside and outside.

Finishes:
Available in Polished or Matt finish.

Custom Finishes:
Includes any custom colours outside standard options and all metallics.
Please contact us for a quotation on all custom finishes.

THE MAYA



A-A (1:8)

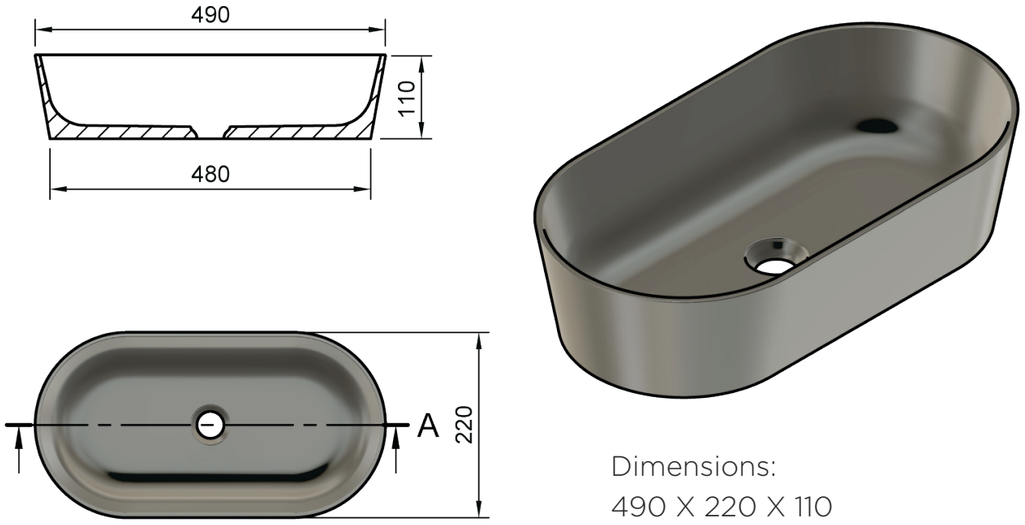

Dimensions:
490 X 220 X 110



Standard colours, as well as any shade from the RAL colour chart. Metallic finishes available.

Colour Options:
White or Colour – Two-tone (White inside, standard colour outside.)
Colour – Standard colour inside and outside.

Finishes:
Available in Polished or Matt finish.

Custom Finishes:
Includes any custom colours outside standard options and all metallics.
Please contact us for a quotation on all custom finishes.

THE MILA



A-A (1:8)

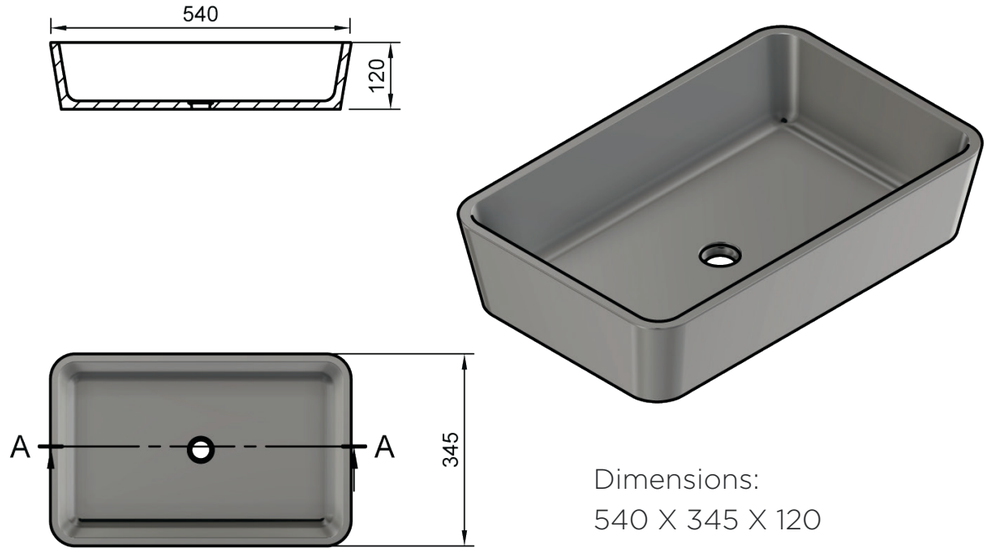

Dimensions:
540 X 345 X 120



Standard colours, as well as any shade from the RAL colour chart. Metallic finishes available.

Colour Options:
White or Colour – Two-tone (White inside, standard colour outside.)
Colour – Standard colour inside and outside.

Finishes:
Available in Polished or Matt finish.

Custom Finishes:
Includes any custom colours outside standard options and all metallics.
Please contact us for a quotation on all custom finishes.

THE NUOVA



A-A (1:8)

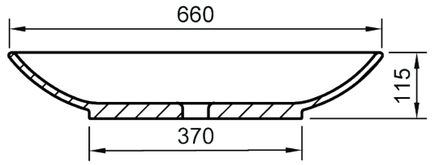

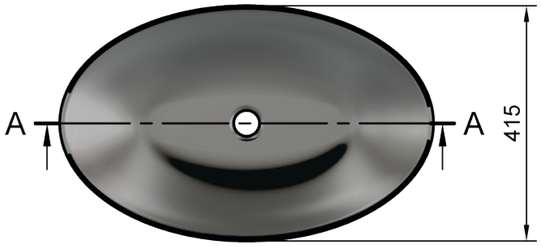



Dimensions:
660 X 415 X 115



Standard colours, as well as any shade from the RAL colour chart. Metallic finishes available.

Colour Options:
White or Colour – Two-tone (White inside, standard colour outside.)
Colour – Standard colour inside and outside.

Finishes:
Available in Polished or Matt finish.

Custom Finishes:
Includes any custom colours outside standard options and all metallics.
Please contact us for a quotation on all custom finishes.

THE OPHELIA



A-A (1:8)

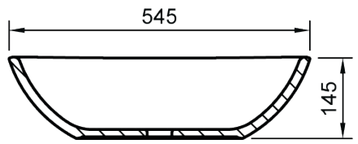

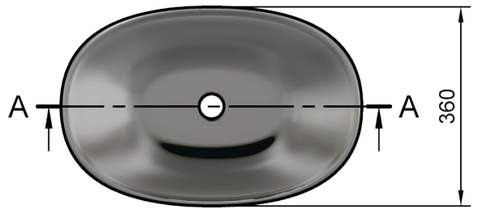



Dimensions:
545 X 360 X 145



Standard colours, as well as any shade from the RAL colour chart. Metallic finishes available.

Colour Options:
White or Colour – Two-tone (White inside, standard colour outside.)
Colour – Standard colour inside and outside.

Finishes:
Available in Polished or Matt finish.

Custom Finishes:
Includes any custom colours outside standard options and all metallics.
Please contact us for a quotation on all custom finishes.

THE RISATA



A-A (1:7)

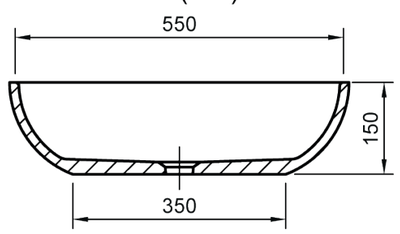



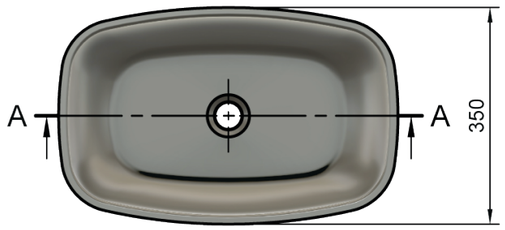

Dimensions:
550 X 350 X 150



Standard colours, as well as any shade from the RAL colour chart. Metallic finishes available.

Colour Options:
White or Colour – Two-tone (White inside, standard colour outside.)
Colour – Standard colour inside and outside.

Finishes:
Available in Polished or Matt finish.

Custom Finishes:
Includes any custom colours outside standard options and all metallics.
Please contact us for a quotation on all custom finishes.

THE SOPHIA



A-A (1:8)

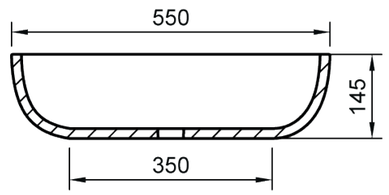



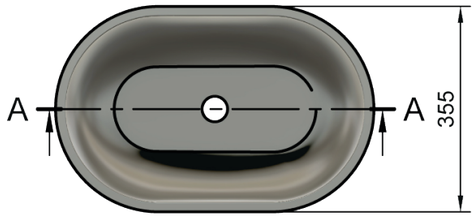

Dimensions:
550 X 355 X 145



Standard colours, as well as any shade from the RAL colour chart. Metallic finishes available.

Colour Options:
White or Colour – Two-tone (White inside, standard colour outside.)
Colour – Standard colour inside and outside.

Finishes:
Available in Polished or Matt finish.

Custom Finishes:
Includes any custom colours outside standard options and all metallics.
Please contact us for a quotation on all custom finishes.

THE STELLA



A-A (1:5)

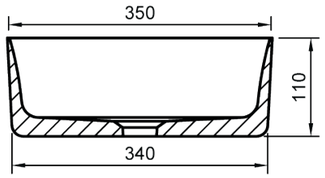

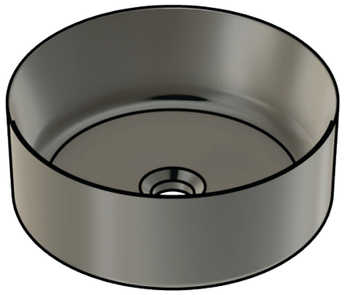

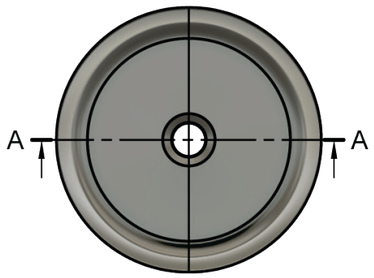

Dimensions:
350D X 110H



Standard colours, as well as any shade from the RAL colour chart. Metallic finishes available.

Colour Options:
White or Colour – Two-tone (White inside, standard colour outside.)
Colour – Standard colour inside and outside.

Finishes:
Available in Polished or Matt finish.

Custom Finishes:
Includes any custom colours outside standard options and all metallics.
Please contact us for a quotation on all custom finishes.

THE ZOE UNDERSLUNG



A-A (1:6)

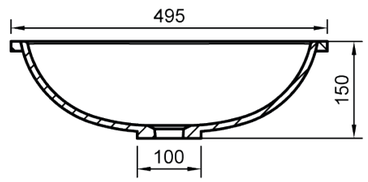

A - A

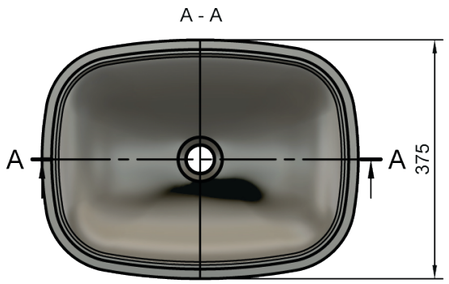

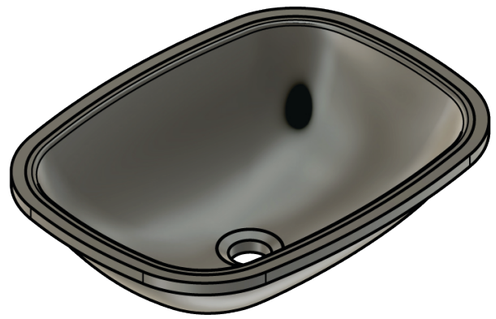

Dimensions:
495 X 375 X 150



Standard colours, as well as any shade from the RAL colour chart. Metallic finishes available.

Colour Options:
White or Colour – Two-tone (White inside, standard colour outside.)
Colour – Standard colour inside and outside.

Finishes:
Available in Polished or Matt finish.

Custom Finishes:
Includes any custom colours outside standard options and all metallics.
Please contact us for a quotation on all custom finishes.

GOLD
BASIN RANGE:





A-A (1:8)

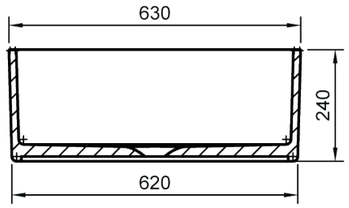

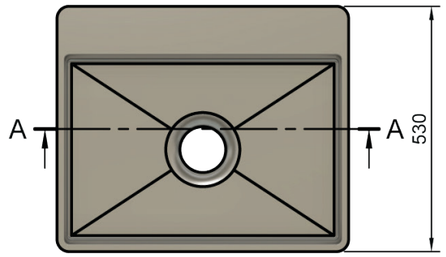

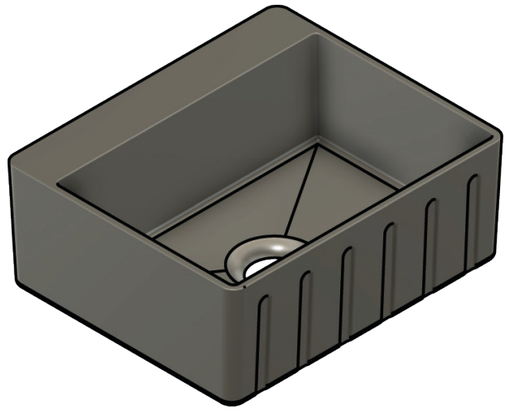

Dimensions:
630 X 530 X 240



Standard colours, as well as any shade from the RAL colour chart. Metallic finishes available.

Colour Options:
White or Colour – Two-tone (White inside, standard colour outside.)
Colour – Standard colour inside and outside.

Finishes:
Available in Polished or Matt finish.

Custom Finishes:
Includes any custom colours outside standard options and all metallics.
Please contact us for a quotation on all custom finishes.

THE DOUBLE BUTLER FLUTED



A-A (1:10)

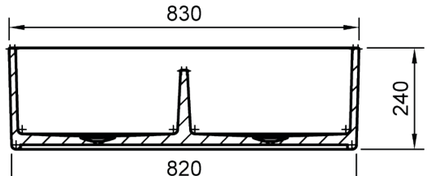

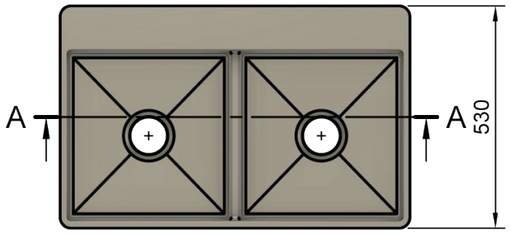

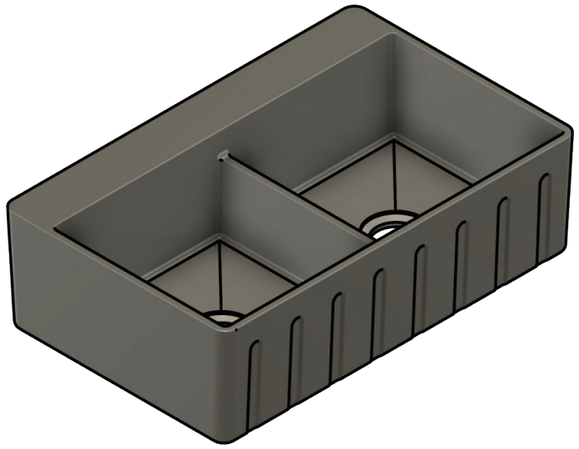

Dimensions:
830 X 530 X 240



Standard colours, as well as any shade from the RAL colour chart. Metallic finishes available.

Colour Options:
White or Colour – Two-tone (White inside, standard colour outside.)
Colour – Standard colour inside and outside.

Finishes:
Available in Polished or Matt finish.

Custom Finishes:
Includes any custom colours outside standard options and all metallics.
Please contact us for a quotation on all custom finishes.

THE BRODEE





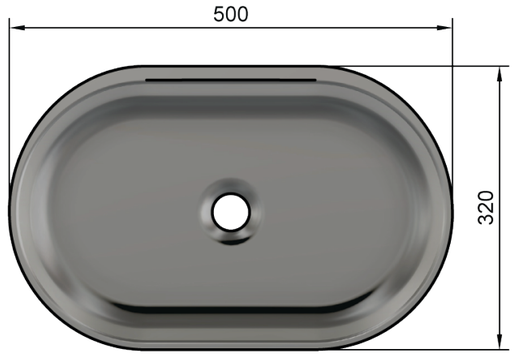



Dimensions:
500 X 320 X 145



Standard colours, as well as any shade from the RAL colour chart. Metallic finishes available.

Colour Options:
White or Colour – Two-tone (White inside, standard colour outside.)
Colour – Standard colour inside and outside.

Finishes:
Available in Polished or Matt finish.

Custom Finishes:
Includes any custom colours outside standard options and all metallics.
Please contact us for a quotation on all custom finishes.

THE BRODEE FLUTED







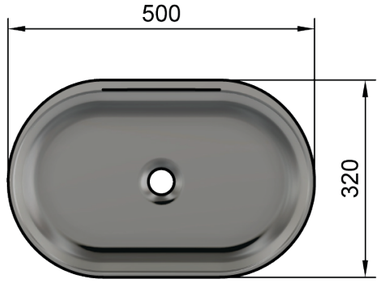

Dimensions:
500 X 320 X 145



Standard colours, as well as any shade from the RAL colour chart. Metallic finishes available.

Colour Options:
White or Colour – Two-tone (White inside, standard colour outside.)
Colour – Standard colour inside and outside.

Finishes:
Available in Polished or Matt finish.

Custom Finishes:
Includes any custom colours outside standard options and all metallics.
Please contact us for a quotation on all custom finishes.

THE COCO



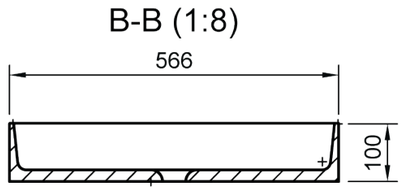

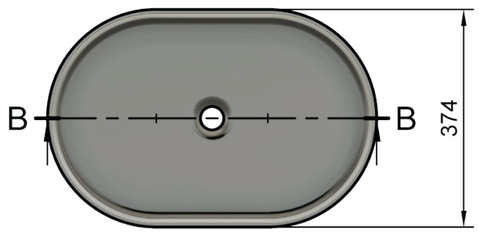

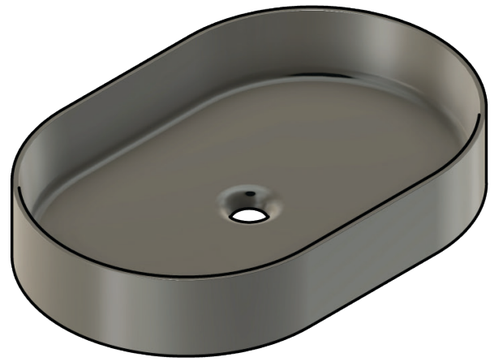

Dimensions:
566 X 374 X 100



Standard colours, as well as any shade from the RAL colour chart. Metallic finishes available.

Colour Options:
White or Colour – Two-tone (White inside, standard colour outside.)
Colour – Standard colour inside and outside.

Finishes:
Available in Polished or Matt finish.

Custom Finishes:
Includes any custom colours outside standard options and all metallics.
Please contact us for a quotation on all custom finishes.

THE ARIANA TAPERED PILLAR



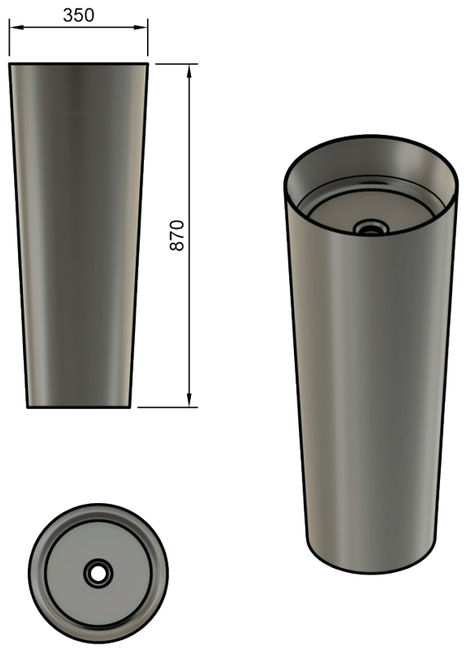

Dimensions:
350D X 870H



Standard colours, as well as any shade from the RAL colour chart. Metallic finishes available.

Colour Options:
White or Colour – Two-tone (White inside, standard colour outside.)
Colour – Standard colour inside and outside.

Finishes:
Available in Polished or Matt finish.

Custom Finishes:
Includes any custom colours outside standard options and all metallics.
Please contact us for a quotation on all custom finishes.

THE OVALE LARGE



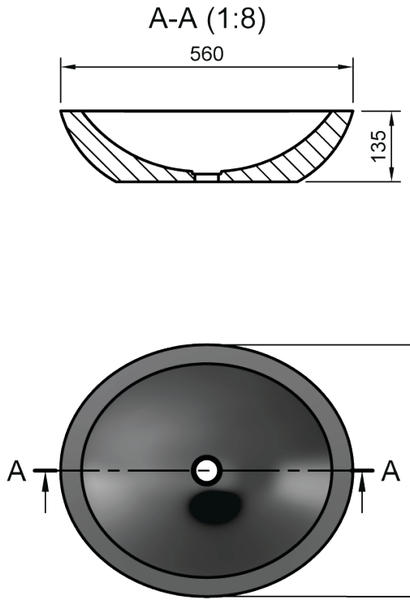

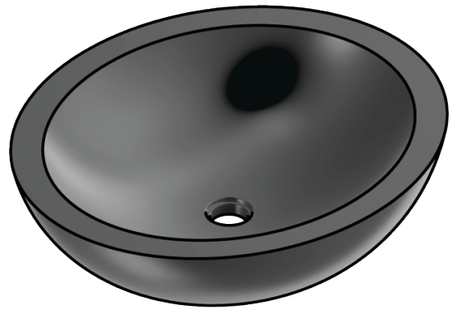

Dimensions:
560 X 475 X 140



Standard colours, as well as any shade from the RAL colour chart. Metallic finishes available.

Colour Options:
White or Colour – Two-tone (White inside, standard colour outside.)
Colour – Standard colour inside and outside.

Finishes:
Available in Polished or Matt finish.

Custom Finishes:
Includes any custom colours outside standard options and all metallics.
Please contact us for a quotation on all custom finishes.

THE MARGOT PILLAR



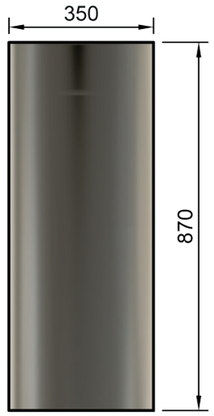





Dimensions:
350D X 870H



Standard colours, as well as any shade from the RAL colour chart. Metallic finishes available.

Colour Options:
White or Colour – Two-tone (White inside, standard colour outside.)
Colour – Standard colour inside and outside.

Finishes:
Available in Polished or Matt finish.

Custom Finishes:
Includes any custom colours outside standard options and all metallics.
Please contact us for a quotation on all custom finishes.

THE ROSE



A-A (1:8)

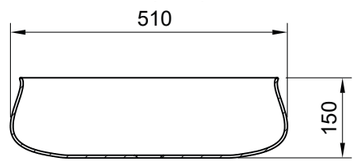



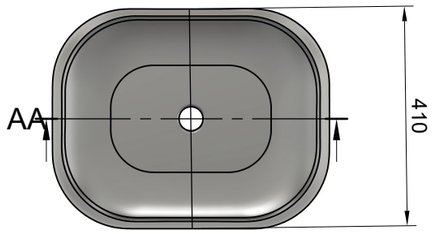

Dimensions:
510 X 410 X 150



Standard colours, as well as any shade from the RAL colour chart. Metallic finishes available.

Colour Options:
White or Colour – Two-tone (White inside, standard colour outside.)
Colour – Standard colour inside and outside.

Finishes:
Available in Polished or Matt finish.

Custom Finishes:
Includes any custom colours outside standard options and all metallics.
Please contact us for a quotation on all custom finishes.















25 YEAR WARRANTY

FOR YOUR TOTAL PEACE OF MIND

Livingstone Baths hereby warrants our baths and basins to be free of any manufacturing defects, in materials or craftmanship, for a period of 25 years from the date of purchase. Livingstone Baths undertake, at their own discretion, to either repair or replace the product should it be deemed to be defective. Our products are manufactured using UV stable materials and are suitable for outdoor installation.

Terms and Conditions do apply.

livingstone baths

10-14 Evans Ave, Epping, Cape Town, 7460

t | +27 (0)21 556 8952

- Sales Jhb | +27 (0)83 799 4347
- Sales Cpt | +27 (0)71 857 9227
- Sales Dbn | +27 (0)83 659 9647

e | sales@livingstonebaths.com

www.livingstonebaths.com