THE ZARA



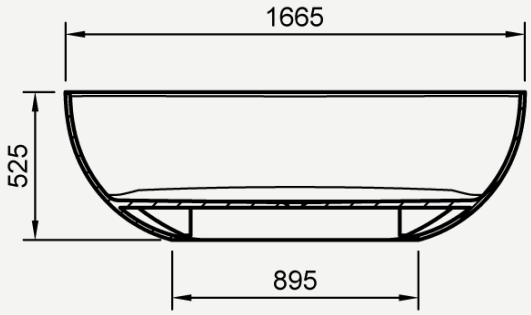

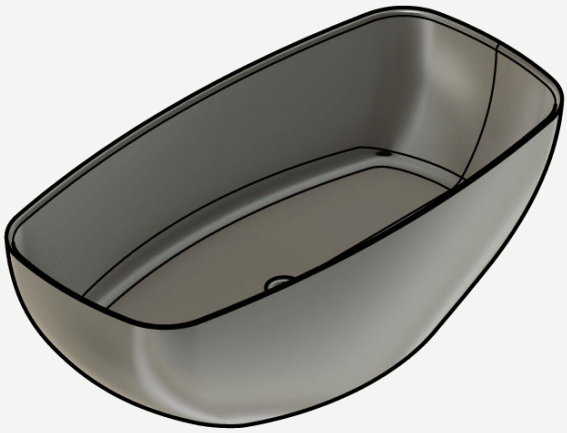



Dimensions:
1665 X 840 X 525

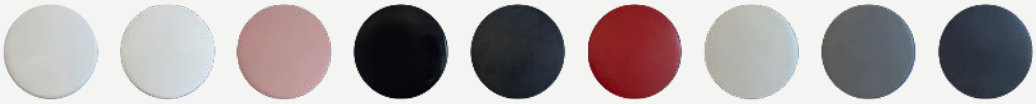

Standard colours, as well as any shade from the RAL colour chart. Metallic finishes available.

Colour Options:
White or Colour – Two-tone (White inside, standard colour outside.)
Colour – Standard colour inside and outside.

Finishes:
Available in Polished or Matt finish.

Custom Finishes:
Includes any custom colours outside standard options and all metallics.
Please contact us for a quotation on all custom finishes.

Integrated Overflow Options Available.