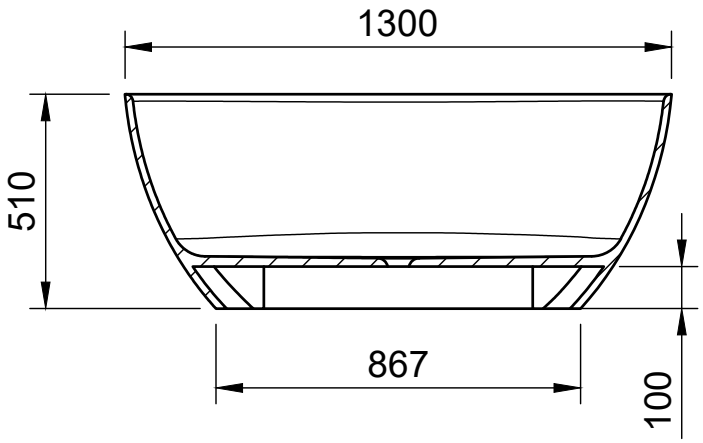

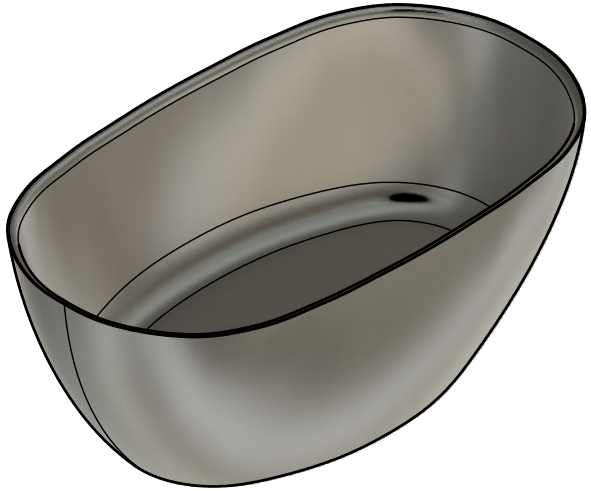

A - A

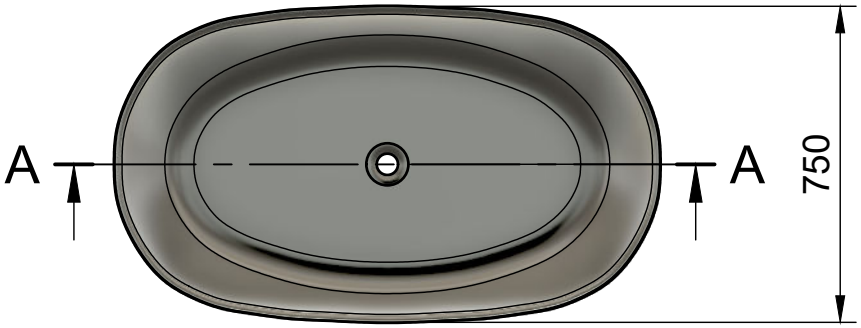

livingstone baths

MONICA BATH

DIMENTIONS:
1300 X 750 X 510