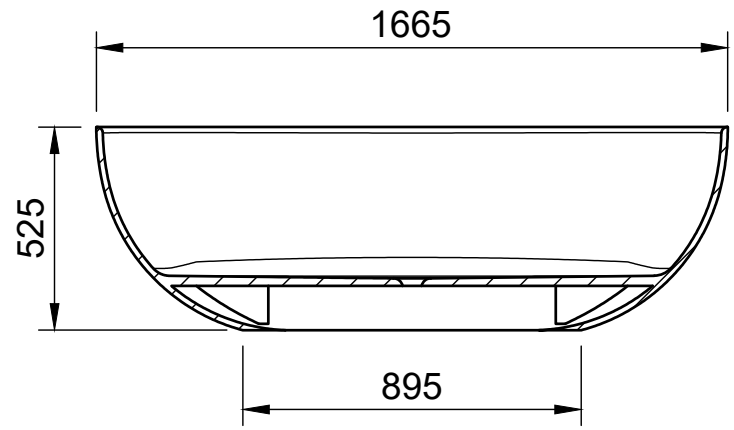





livingstone baths

ZARA BATH

DIMENTIONS:
1665 X 840 X 525